Block Header

Version	1
Previous block	000000000000002efa96db4fd543284c4b8bdc21daaac75c9f311af6312da87d
Merkle root	ba3ffef2b2b29e6ae2fd4f7188c5c2ad13cfe618aa2cde86adacb6229e75b762
Timestamp	2012-08-31 11:32:28
Bits	436658110
Nonce	538012418

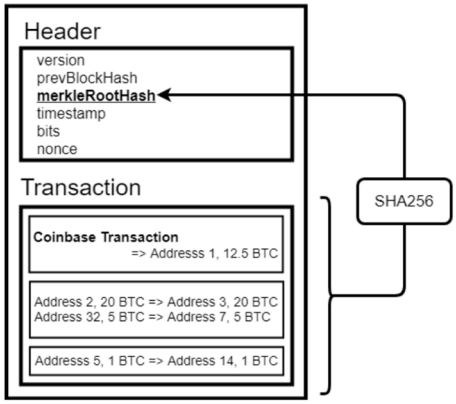

- **Merkle root hash**: **SHA256 (Hash(H(1,2),H(3,4,)), Hash(H(5,6),H(7,8).....))**. This updates specific UTXOs on the chain.

- **Time**: This is the time when the person who created the block started working on it.

- **Bits**: This is like a code that tells you how hard it was to make this block. It is also called the "**target value**".

- **Nonce**: A nonce is a unique number used by miners to create a new block in a blockchain. Miners try different nonces until they find one that gives them the correct hash value for the block, which proves that they did the necessary work to validate the block and add it to the *blockchain*.

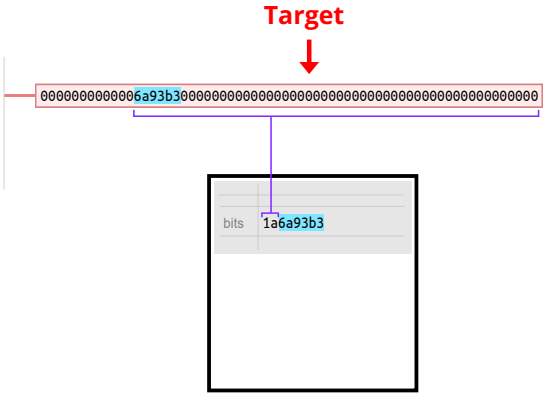

The Nonce Quest: Finding the Magic Number in the Blockchain Race

In the world of *blockchain*, each block has unique information and security measures in place to prevent tampering. One of these measures is the **nonce**, a number used once to create a **unique candidate block hash**.

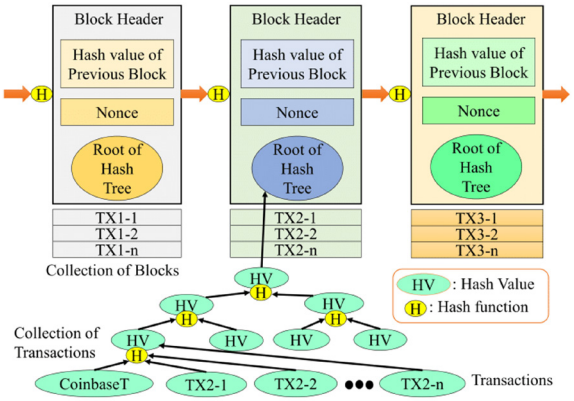

When a miner is trying to add a new block to the *blockchain*, they need to **find the right nonce** that will **produce a hash value that meets the target set by the network**. This is done by trying different nonce values and running them through the hash function until the correct one is found.